$$\begin{bmatrix} -1.6 & 1.2 \end{bmatrix}$$

Solution. The characteristic equation is the quadratic equation

$$\det[\mathbf{A} - \lambda\mathbf{I}] = \begin{vmatrix} -4-\lambda & 4 \\ -1.6 & 1.2-\lambda \end{vmatrix} = \lambda^2 + 2.8\lambda + 1.6 = 0.$$

It has the solutions $\lambda_1 = -2$ and $\lambda_2 = -0.8$. These are the eigenvalues of $\mathbf{A}$.

Eigenvectors are obtained from (14*). For $\lambda = \lambda_1 = -2$ we have from (14*)

$$\begin{aligned} (-4.0 + 2.0)x_1 + \quad 4.0x_2 &= 0 \\ -1.6x_1 \quad + (1.2 + 2.0)x_2 &= 0. \end{aligned}$$

A solution of the first equation is $x_1 = 2$, $x_2 = 1$. This also satisfies the second equation. (Why?). Hence an eigenvector of $\mathbf{A}$ corresponding to $\lambda_1 = -2.0$ is

$$\mathbf{x}^{(1)} = \begin{bmatrix} 2 \\ 1 \end{bmatrix}. \qquad \text{Similarly,} \qquad \mathbf{x}^{(2)} = \begin{bmatrix} 1 \\ 0.8 \end{bmatrix} \tag{17}$$

is an eigenvector of $\mathbf{A}$ corresponding to $\lambda_2 = -0.8$, as obtained from (14*) with $\lambda = \lambda_2$. Verify this. ■

Systems of ODEs as Models

We first illustrate with a few typical examples that systems of ODEs can serve as models in various applications. We further show that a higher order ODE (with the highest derivative standing alone on one side) can be reduced to a first-order system. Both facts account for the practical importance of these systems.

MPLE 1 Mixing Problem Involving Two Tanks

A mixing problem involving a single tank is modeled by a single ODE, and you may first review the corresponding Example 3 in Sec. 1.3 because the principle of modeling will be the same for two tanks. The model will be a system of two first-order ODEs.

Tank T_1 and T_2 in Fig. 77 contain initially 100 gal of water each. In T_1 the water is pure, whereas 150 lb of fertilizer are dissolved in T_2. By circulating liquid at a rate of 2 gal/min and stirring (to keep the mixture uniform) the amounts of fertilizer $y_1(t)$ in T_1 and $y_2(t)$ in T_2 change with time t. How long should we let the liquid circulate so that T_1 will contain at least half as much fertilizer as there will be left in T_2?

Solution. *Step 1.* **Setting up the model.** As for a single tank, the time rate of change $y_1'(t)$ of $y_1(t)$ equals inflow minus outflow. Similarly for tank T_2. From Fig. 77 we see that

$$y_1' = \text{Inflow/min} - \text{Outflow/min} = \frac{2}{100}y_2 - \frac{2}{100}y_1 \qquad (\text{Tank } T_1)$$

$$y_2' = \text{Inflow/min} - \text{Outflow/min} = \frac{2}{100}y_1 - \frac{2}{100}y_2 \qquad (\text{Tank } T_2).$$

Hence the mathematical model of our mixture problem is the system of first-order ODEs

$$\begin{aligned} y_1' &= -0.02y_1 + 0.02y_2 && (\text{Tank } T_1) \\ y_2' &= 0.02y_1 - 0.02y_2 && (\text{Tank } T_2). \end{aligned}$$

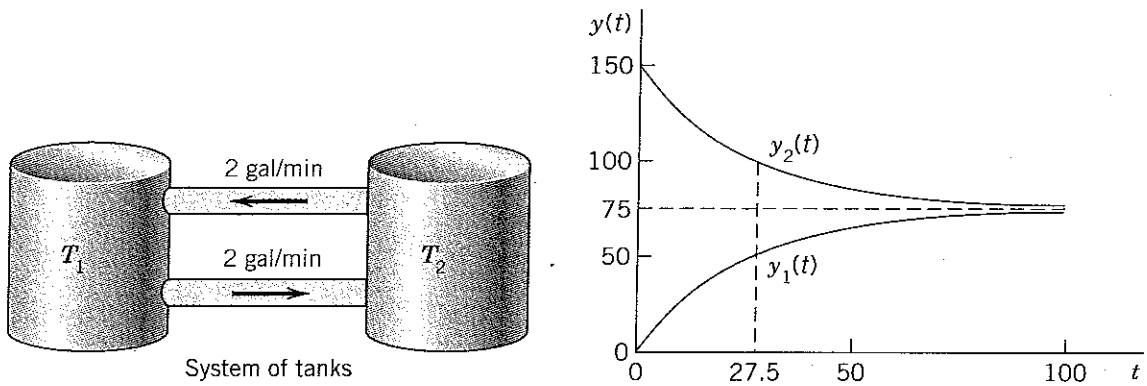

Fig. 77. Fertilizer content in Tanks T_1 (lower curve) and T_2

As a vector equation with column vector $\mathbf{y} = \begin{bmatrix} y_1 \\ y_2 \end{bmatrix}$ and matrix $\mathbf{A}$ this becomes

$$\mathbf{y}' = \mathbf{A}\mathbf{y}, \qquad \text{where} \qquad \mathbf{A} = \begin{bmatrix} -0.02 & 0.02 \\ 0.02 & -0.02 \end{bmatrix}.$$

Step 2. **General solution.** As for a single equation, we try an exponential function of t,

$$\mathbf{y} = \mathbf{x}e^{\lambda t}. \qquad \text{Then} \qquad \mathbf{y}' = \lambda\mathbf{x}e^{\lambda t} = \mathbf{A}\mathbf{x}e^{\lambda t}. \tag{1}$$

Dividing the last equation $\lambda\mathbf{x}e^{\lambda t} = \mathbf{A}\mathbf{x}e^{\lambda t}$ by $e^{\lambda t}$ and interchanging the left and right sides, we obtain

$$\mathbf{A}\mathbf{x} = \lambda\mathbf{x}.$$

We need nontrivial solutions (solutions that are not identically zero). Hence we have to look for eigenvalues and eigenvectors of $\mathbf{A}$. The eigenvalues are the solutions of the characteristic equation

$$\det(\mathbf{A} - \lambda\mathbf{I}) = \begin{vmatrix} -0.02 - \lambda & 0.02 \\ 0.02 & -0.02 - \lambda \end{vmatrix} = (-0.02 - \lambda)^2 - 0.02^2 = \lambda(\lambda + 0.04) = 0. \tag{2}$$

We see that $\lambda_1 = 0$ (which can very well happen—don't get mixed up—it is eigen*vectors* that must not be zero) and $\lambda_2 = -0.04$. Eigenvectors are obtained from (14*) in Sec. 4.0 with $\lambda = 0$ and $\lambda = -0.04$. For our present $\mathbf{A}$ this gives [we need only the first equation in (14*)]

$$-0.02x_1 + 0.02x_2 = 0 \qquad \text{and} \qquad (-0.02 + 0.04)x_1 + 0.02x_2 = 0,$$

respectively. Hence $x_1 = x_2$ and $x_1 = -x_2$, respectively, and we can take $x_1 = x_2 = 1$ and $x_1 = -x_2 = 1$. This gives two eigenvectors corresponding to $\lambda_1 = 0$ and $\lambda_2 = -0.04$, respectively, namely,

$$\mathbf{x}^{(1)} = \begin{bmatrix} 1 \\ 1 \end{bmatrix} \qquad \text{and} \qquad \mathbf{x}^{(2)} = \begin{bmatrix} 1 \\ -1 \end{bmatrix}.$$

From (1) and the superposition principle (which continues to hold for systems of homogeneous linear ODEs) we thus obtain a solution

$$\mathbf{y} = c_1\mathbf{x}^{(1)}e^{\lambda_1 t} + c_2\mathbf{x}^{(2)}e^{\lambda_2 t} = c_1\begin{bmatrix} 1 \\ 1 \end{bmatrix} + c_2\begin{bmatrix} 1 \\ -1 \end{bmatrix}e^{-0.04t} \tag{3}$$

where c_1 and c_2 are arbitrary constants. Later we shall call this a **general solution.**

Step 3. **Use of initial conditions.** The initial conditions are $y_1(0) = 0$ (no fertilizer in tank T_1) and $y_2(0) = 150$

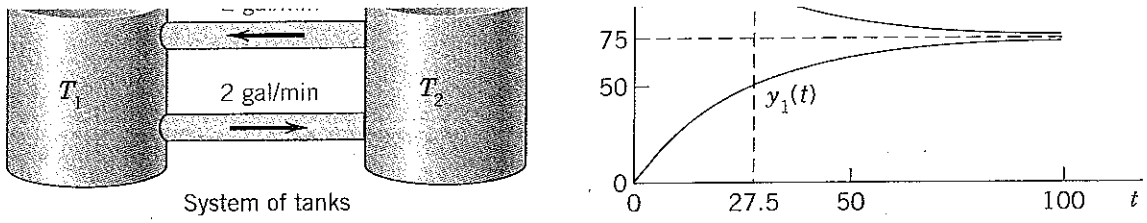

Fig. 77. Fertilizer content in Tanks T_1 (lower curve) and T_2

As a vector equation with column vector $\mathbf{y} = \begin{bmatrix} y_1 \\ y_2 \end{bmatrix}$ and matrix $\mathbf{A}$ this becomes

$$\mathbf{y}' = \mathbf{A}\mathbf{y}, \qquad \text{where} \qquad \mathbf{A} = \begin{bmatrix} -0.02 & 0.02 \\ 0.02 & -0.02 \end{bmatrix}.$$

Step 2. **General solution.** As for a single equation, we try an exponential function of t,

$$\mathbf{y} = \mathbf{x}e^{\lambda t}. \qquad \text{Then} \qquad \mathbf{y}' = \lambda\mathbf{x}e^{\lambda t} = \mathbf{A}\mathbf{x}e^{\lambda t}. \tag{1}$$

Dividing the last equation $\lambda\mathbf{x}e^{\lambda t} = \mathbf{A}\mathbf{x}e^{\lambda t}$ by $e^{\lambda t}$ and interchanging the left and right sides, we obtain

$$\mathbf{A}\mathbf{x} = \lambda\mathbf{x}.$$

We need nontrivial solutions (solutions that are not identically zero). Hence we have to look for eigenvalues and eigenvectors of $\mathbf{A}$. The eigenvalues are the solutions of the characteristic equation

$$\det(\mathbf{A} - \lambda\mathbf{I}) = \begin{vmatrix} -0.02 - \lambda & 0.02 \\ 0.02 & -0.02 - \lambda \end{vmatrix} = (-0.02 - \lambda)^2 - 0.02^2 = \lambda(\lambda + 0.04) = 0. \tag{2}$$

We see that $\lambda_1 = 0$ (which can very well happen—don't get mixed up—it is eigen*vectors* that must not be zero) and $\lambda_2 = -0.04$. Eigenvectors are obtained from (14*) in Sec. 4.0 with $\lambda = 0$ and $\lambda = -0.04$. For our present $\mathbf{A}$ this gives [we need only the first equation in (14*)]

$$-0.02x_1 + 0.02x_2 = 0 \qquad \text{and} \qquad (-0.02 + 0.04)x_1 + 0.02x_2 = 0,$$

respectively. Hence $x_1 = x_2$ and $x_1 = -x_2$, respectively, and we can take $x_1 = x_2 = 1$ and $x_1 = -x_2 = 1$. This gives two eigenvectors corresponding to $\lambda_1 = 0$ and $\lambda_2 = -0.04$, respectively, namely,

$$\mathbf{x}^{(1)} = \begin{bmatrix} 1 \\ 1 \end{bmatrix} \qquad \text{and} \qquad \mathbf{x}^{(2)} = \begin{bmatrix} 1 \\ -1 \end{bmatrix}.$$

From (1) and the superposition principle (which continues to hold for systems of homogeneous linear ODEs) we thus obtain a solution

$$\mathbf{y} = c_1\mathbf{x}^{(1)}e^{\lambda_1 t} + c_2\mathbf{x}^{(2)}e^{\lambda_2 t} = c_1\begin{bmatrix} 1 \\ 1 \end{bmatrix} + c_2\begin{bmatrix} 1 \\ -1 \end{bmatrix}e^{-0.04t} \tag{3}$$

where c_1 and c_2 are arbitrary constants. Later we shall call this a **general solution.**

Step 3. **Use of initial conditions.** The initial conditions are $y_1(0) = 0$ (no fertilizer in tank T_1) and $y_2(0) = 150$. From this and (3) with $t = 0$ we obtain

$$\mathbf{y}(0) = c_1\begin{bmatrix} 1 \\ 1 \end{bmatrix} + c_2\begin{bmatrix} 1 \\ -1 \end{bmatrix} = \begin{bmatrix} c_1 + c_2 \\ c_1 - c_2 \end{bmatrix} = \begin{bmatrix} 0 \\ 150 \end{bmatrix}.$$

In components this is $c_1 + c_2 = 0$, $c_1 - c_2 = 150$. The solution is $c_1 = 75$, $c_2 = -75$. This gives the answer

$$\mathbf{y} = 75\mathbf{x}^{(1)} - 75\mathbf{x}^{(2)}e^{-0.04t} = 75\begin{bmatrix}1\\1\end{bmatrix} - 75\begin{bmatrix}1\\-1\end{bmatrix}e^{-0.04t}.$$

In components,

$$y_1 = 75 - 75e^{-0.04t} \qquad \text{(Tank } T_1\text{, lower curve)}$$

$$y_2 = 75 + 75e^{-0.04t} \qquad \text{(Tank } T_2\text{, upper curve).}$$

Figure 77 shows the exponential increase of y_1 and the exponential decrease of y_2 to the common limit 75 lb. Did you expect this for physical reasons? Can you physically explain why the curves look "symmetric"? Would the limit change if T_1 initially contained 100 lb of fertilizer and T_2 contained 50 lb?

Step 4. **Answer.** T_1 contains half the fertilizer amount of T_2 if it contains 1/3 of the total amount, that is, 50 lb. Thus

$$y_1 = 75 - 75e^{-0.04t} = 50, \qquad e^{-0.04t} = \tfrac{1}{3}, \qquad t = (\ln 3)/0.04 = 27.5.$$

Hence the fluid should circulate for at least about half an hour. ■

EXAMPLE 2 Electrical Network

Find the currents $I_1(t)$ and $I_2(t)$ in the network in Fig. 78. Assume all currents and charges to be zero at $t = 0$, the instant when the switch is closed.

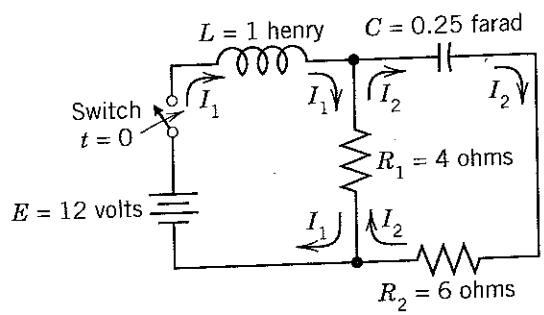

Fig. 78. Electrical network in Example 2

Solution. *Step 1.* **Setting up the mathematical model.** The model of this network is obtained from Kirchhoff's voltage law, as in Sec. 2.9 (where we considered single circuits). Let $I_1(t)$ and $I_2(t)$ be the currents in the left and right loops, respectively. In the left loop the voltage drops are $LI_1' = I_1'$ [V] over the inductor and $R_1(I_1 - I_2) = 4(I_1 - I_2)$ [V] over the resistor, the difference because I_1 and I_2 flow through the resistor in opposite directions. By Kirchhoff's voltage law the sum of these drops equals the voltage of the battery; that is, $I_1' + 4(I_1 - I_2) = 12$, hence

$$I_1' = -4I_1 + 4I_2 + 12. \tag{4a}$$

In the right loop the voltage drops are $R_2I_2 = 6I_2$ [V] and $R_1(I_2 - I_1) = 4(I_2 - I_1)$ [V] over the resistors and $(1/C)\int I_2\,dt = 4\int I_2\,dt$ [V] over the capacitor, and their sum is zero,

$$6I_2 + 4(I_2 - I_1) + 4\int I_2\,dt = 0 \qquad \text{or} \qquad 10I_2 - 4I_1 + 4\int I_2\,dt = 0.$$

in components,

$$y_1 = 75 - 75e^{-0.04t} \qquad \text{(Tank } T_1\text{, lower curve)}$$

$$y_2 = 75 + 75e^{-0.04t} \qquad \text{(Tank } T_2\text{, upper curve).}$$

Figure 77 shows the exponential increase of y_1 and the exponential decrease of y_2 to the common limit 75 lb. Did you expect this for physical reasons? Can you physically explain why the curves look "symmetric"? Would the limit change if T_1 initially contained 100 lb of fertilizer and T_2 contained 50 lb?

***Step 4.* Answer.** T_1 contains half the fertilizer amount of T_2 if it contains 1/3 of the total amount, that is, 50 lb. Thus

$$y_1 = 75 - 75e^{-0.04t} = 50, \qquad e^{-0.04t} = \tfrac{1}{3}, \qquad t = (\ln 3)/0.04 = 27.5.$$

Hence the fluid should circulate for at least about half an hour. ■

EXAMPLE 2 Electrical Network

Find the currents $I_1(t)$ and $I_2(t)$ in the network in Fig. 78. Assume all currents and charges to be zero at $t = 0$, the instant when the switch is closed.

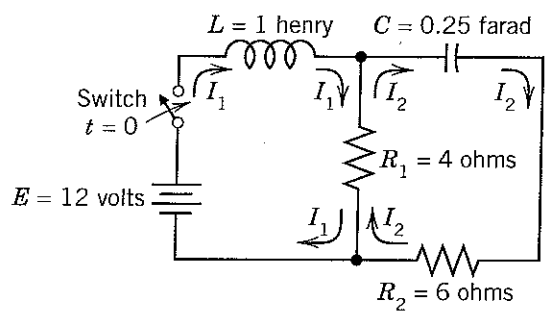

Fig. 78. Electrical network in Example 2

Solution. ***Step 1.* Setting up the mathematical model.** The model of this network is obtained from Kirchhoff's voltage law, as in Sec. 2.9 (where we considered single circuits). Let $I_1(t)$ and $I_2(t)$ be the currents in the left and right loops, respectively. In the left loop the voltage drops are $LI_1' = I_1'$ [V] over the inductor and $R_1(I_1 - I_2) = 4(I_1 - I_2)$ [V] over the resistor, the difference because I_1 and I_2 flow through the resistor in opposite directions. By Kirchhoff's voltage law the sum of these drops equals the voltage of the battery; that is, $I_1' + 4(I_1 - I_2) = 12$, hence

$$I_1' = -4I_1 + 4I_2 + 12. \tag{4a}$$

In the right loop the voltage drops are $R_2I_2 = 6I_2$ [V] and $R_1(I_2 - I_1) = 4(I_2 - I_1)$ [V] over the resistors and $(1/C)\int I_2\,dt = 4\int I_2\,dt$ [V] over the capacitor, and their sum is zero,

$$6I_2 + 4(I_2 - I_1) + 4\int I_2\,dt = 0 \qquad \text{or} \qquad 10I_2 - 4I_1 + 4\int I_2\,dt = 0.$$

Division by 10 and differentiation gives $I_2' - 0.4I_1' + 0.4I_2 = 0$.

To simplify the solution process, we first get rid of $0.4I_1'$, which by (4a) equals $0.4(-4I_1 + 4I_2 + 12)$. Substitution into the present ODE gives

$$I_2' = 0.4I_1' - 0.4I_2 = 0.4(-4I_1 + 4I_2 + 12) - 0.4I_2$$

and by simplification

(4b) $$I_2' = -1.6I_1 + 1.2I_2 + 4.8.$$

In matrix form, (4) is (we write **J** since **I** is the unit matrix)

(5) $$\mathbf{J}' = \mathbf{AJ} + \mathbf{g}, \qquad \text{where} \qquad \mathbf{J} = \begin{bmatrix} I_1 \\ I_2 \end{bmatrix}, \quad \mathbf{A} = \begin{bmatrix} -4.0 & 4.0 \\ -1.6 & 1.2 \end{bmatrix}, \quad \mathbf{g} = \begin{bmatrix} 12.0 \\ 4.8 \end{bmatrix}.$$

Step 2. **Solving (5).** Because of the vector **g** this is a *nonhomogeneous* system, and we try to proceed as for a single ODE, solving first the *homogeneous* system $\mathbf{J}' = \mathbf{AJ}$ (thus $\mathbf{J}' - \mathbf{AJ} = \mathbf{0}$) by substituting $\mathbf{J} = \mathbf{x}e^{\lambda t}$. This gives

$$\mathbf{J}' = \lambda \mathbf{x}e^{\lambda t} = \mathbf{A}\mathbf{x}e^{\lambda t}, \qquad \text{hence} \qquad \mathbf{Ax} = \lambda \mathbf{x}.$$

Hence to obtain a nontrivial solution, we again need the eigenvalues and eigenvectors. For the present matrix **A** they are derived in Example 1 in Sec. 4.0:

$$\lambda_1 = -2, \qquad \mathbf{x}^{(1)} = \begin{bmatrix} 2 \\ 1 \end{bmatrix}; \qquad \lambda_2 = -0.8, \qquad \mathbf{x}^{(2)} = \begin{bmatrix} 1 \\ 0.8 \end{bmatrix}.$$

Hence a "general solution" of the homogeneous system is

$$\mathbf{J}_h = c_1\mathbf{x}^{(1)}e^{-2t} + c_2\mathbf{x}^{(2)}e^{-0.8t}.$$

For a particular solution of the nonhomogeneous system (5), since **g** is constant, we try a constant column vector $\mathbf{J}_p = \mathbf{a}$ with components a_1, a_2. Then $\mathbf{J}_p' = \mathbf{0}$, and substitution into (5) gives $\mathbf{Aa} + \mathbf{g} = \mathbf{0}$; in components,

$$\begin{aligned} -4.0a_1 + 4.0a_2 + 12.0 &= 0 \\ -1.6a_1 + 1.2a_2 + 4.8 &= 0. \end{aligned}$$

The solution is $a_1 = 3$, $a_2 = 0$; thus $\mathbf{a} = \begin{bmatrix} 3 \\ 0 \end{bmatrix}$. Hence

(6) $$\mathbf{J} = \mathbf{J}_h + \mathbf{J}_p = c_1\mathbf{x}^{(1)}e^{-2t} + c_2\mathbf{x}^{(2)}e^{-0.8t} + \mathbf{a};$$

in components,

$$\begin{aligned} I_1 &= 2c_1e^{-2t} + c_2e^{-0.8t} + 3 \\ I_2 &= c_1e^{-2t} + 0.8c_2e^{-0.8t}. \end{aligned}$$

The initial conditions give

$$\begin{aligned} I_1(0) &= 2c_1 + c_2 + 3 = 0 \\ I_2(0) &= c_1 + 0.8c_2 = 0. \end{aligned}$$

Hence $c_1 = -4$ and $c_2 = 5$. As the solution of our problem we thus obtain

(7) $$\mathbf{J} = -4\mathbf{x}^{(1)}e^{-2t} + 5\mathbf{x}^{(2)}e^{-0.8t} + \mathbf{a}.$$

In components (Fig. 79b),

$$\begin{aligned} I_1 &= -8e^{-2t} + 5e^{-0.8t} + 3 \\ I_2 &= -4e^{-2t} + 4e^{-0.8t}. \end{aligned}$$

Now comes an important idea, on which we shall elaborate further, beginning in Sec. 4.3. Figure 79a shows $I_1(t)$ and $I_2(t)$ as two separate curves. Figure 79b shows these two currents as a single curve $[I_1(t), I_2(t)]$ in the I_1I_2-plane. This is a parametric representation with time t as the parameter. It is often important to know in

$$(5) \qquad \mathbf{J}' = \mathbf{A}\mathbf{J} + \mathbf{g}, \qquad \text{where} \qquad \mathbf{J} = \begin{bmatrix} I_1 \\ I_2 \end{bmatrix}, \quad \mathbf{A} = \begin{bmatrix} -4.0 & 4.0 \\ -1.6 & 1.2 \end{bmatrix}, \quad \mathbf{g} = \begin{bmatrix} 12.0 \\ 4.8 \end{bmatrix}.$$

Step 2. **Solving (5).** Because of the vector $\mathbf{g}$ this is a *nonhomogeneous* system, and we try to proceed as for a single ODE, solving first the *homogeneous* system $\mathbf{J}' = \mathbf{A}\mathbf{J}$ (thus $\mathbf{J}' - \mathbf{A}\mathbf{J} = \mathbf{0}$) by substituting $\mathbf{J} = \mathbf{x}e^{\lambda t}$. This gives

$$\mathbf{J}' = \lambda \mathbf{x} e^{\lambda t} = \mathbf{A}\mathbf{x}e^{\lambda t}, \qquad \text{hence} \qquad \mathbf{A}\mathbf{x} = \lambda \mathbf{x}.$$

Hence to obtain a nontrivial solution, we again need the eigenvalues and eigenvectors. For the present matrix $\mathbf{A}$ they are derived in Example 1 in Sec. 4.0:

$$\lambda_1 = -2, \qquad \mathbf{x}^{(1)} = \begin{bmatrix} 2 \\ 1 \end{bmatrix}; \qquad \lambda_2 = -0.8, \qquad \mathbf{x}^{(2)} = \begin{bmatrix} 1 \\ 0.8 \end{bmatrix}.$$

Hence a "general solution" of the homogeneous system is

$$\mathbf{J}_h = c_1 \mathbf{x}^{(1)} e^{-2t} + c_2 \mathbf{x}^{(2)} e^{-0.8t}.$$

For a particular solution of the nonhomogeneous system (5), since $\mathbf{g}$ is constant, we try a constant column vector $\mathbf{J}_p = \mathbf{a}$ with components a_1, a_2. Then $\mathbf{J}_p' = \mathbf{0}$, and substitution into (5) gives $\mathbf{A}\mathbf{a} + \mathbf{g} = \mathbf{0}$; in components,

$$\begin{aligned} -4.0a_1 + 4.0a_2 + 12.0 &= 0 \\ -1.6a_1 + 1.2a_2 + 4.8 &= 0. \end{aligned}$$

The solution is $a_1 = 3$, $a_2 = 0$; thus $\mathbf{a} = \begin{bmatrix} 3 \\ 0 \end{bmatrix}$. Hence

$$(6) \qquad \mathbf{J} = \mathbf{J}_h + \mathbf{J}_p = c_1 \mathbf{x}^{(1)} e^{-2t} + c_2 \mathbf{x}^{(2)} e^{-0.8t} + \mathbf{a};$$

in components,

$$\begin{aligned} I_1 &= 2c_1 e^{-2t} + c_2 e^{-0.8t} + 3 \\ I_2 &= c_1 e^{-2t} + 0.8c_2 e^{-0.8t}. \end{aligned}$$

The initial conditions give

$$\begin{aligned} I_1(0) &= 2c_1 + c_2 + 3 = 0 \\ I_2(0) &= c_1 + 0.8c_2 = 0. \end{aligned}$$

Hence $c_1 = -4$ and $c_2 = 5$. As the solution of our problem we thus obtain

$$(7) \qquad \mathbf{J} = -4\mathbf{x}^{(1)} e^{-2t} + 5\mathbf{x}^{(2)} e^{-0.8t} + \mathbf{a}.$$

In components (Fig. 79b),

$$\begin{aligned} I_1 &= -8e^{-2t} + 5e^{-0.8t} + 3 \\ I_2 &= -4e^{-2t} + 4e^{-0.8t}. \end{aligned}$$

Now comes an important idea, on which we shall elaborate further, beginning in Sec. 4.3. Figure 79a shows $I_1(t)$ and $I_2(t)$ as two separate curves. Figure 79b shows these two currents as a single curve $[I_1(t), I_2(t)]$ in the I_1I_2-plane. This is a parametric representation with time t as the parameter. It is often important to know in which sense such a curve is traced. This can be indicated by an arrow in the sense of increasing t, as is shown. The I_1I_2-plane is called the **phase plane** of our system (5), and the curve in Fig. 79b is called a **trajectory.** We shall see that such **"phase plane representations"** are far more important than graphs as in Fig. 79a because they will give a much better qualitative overall impression of the general behavior of whole families of solutions, not merely of one solution as in the present case. ■

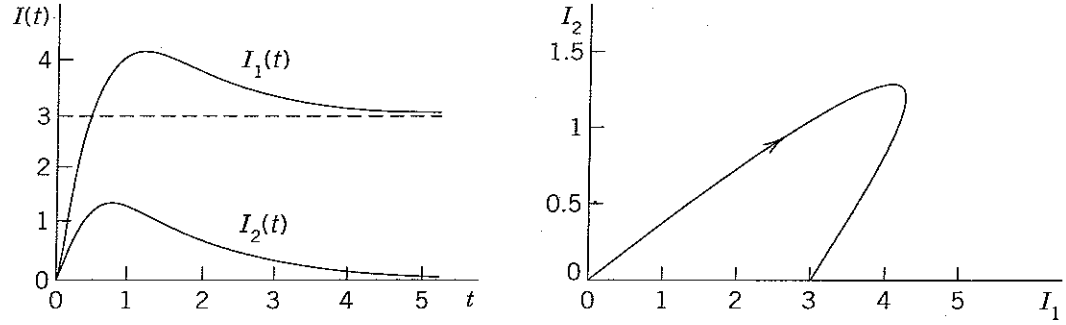

(a) Currents I_1 (upper curve) and I_2

(b) Trajectory $[I_1(t), I_2(t)]^T$ in the I_1I_2-plane (the "phase plane")

Fig. 79. Currents in Example 2

Conversion of an *n*th-Order ODE to a System

We show that an nth-order ODE of the general form (8) (see Theorem 1) can be converted to a system of n first-order ODEs. This is practically and theoretically important—practically because it permits the study and solution of single ODEs by methods for systems, and theoretically because it opens a way of including the theory of higher order ODEs into that of first-order systems. This conversion is another reason for the importance of systems, in addition to their use as models in various basic applications. The idea of the conversion is simple and straightforward, as follows.

THEOREM 1 **Conversion of an ODE**

An nth-order ODE

$$y^{(n)} = F(t, y, y', \cdots, y^{(n-1)}) \tag{8}$$

can be converted to a system of n first-order ODEs by setting

$$y_1 = y, \quad y_2 = y', \quad y_3 = y'', \cdots, y_n = y^{(n-1)}. \tag{9}$$

This system is of the form

$$\begin{aligned} y_1' &= y_2 \\ y_2' &= y_3 \\ &\vdots \\ y_{n-1}' &= y_n \\ y_n' &= F(t, y_1, y_2, \cdots, y_n). \end{aligned} \tag{10}$$

PROOF The first $n - 1$ of these n ODEs follow immediately from (9) by differentiation. Also, $y_n' = y^{(n)}$ by (9), so that the last equation in (10) results from the given ODE (8). ■